Thermal Expansion and Contraction with Polar Bear® III HD

Background

The Polar Bear III HD flat roof system is designed to limit system expansion and contraction due to the natural temperature changes found in the installation environment. Temperature variations may be as severe as 100°F (and more) in a single day. Specific design objectives were implemented into the Polar Bear III HD product platform to account for the thermal growth/contraction that the system will see throughout its lifetime.

Key Features

East/West Direction:

- No continuous rails to allow for isolated movement
- Thermal growth lines of action aren't co-linear
- Attachment to modules at their mounting holes reduces the effective thermal length
- Thermal effects are minimized due to ballast trays being made from steel which has approximately ½ the CTE as the aluminum module frames

North/South Direction:

- Thermal growth lines of action are not co-linear
- Oversized bolt holes at support to claw connections reduces the effective thermal length
- Slotted holes at module to claw connections minimize the effective thermal length
- Thermal effects are minimized due to supports and claws being made from steel which has approximately ½ the CTE as the aluminum module

Polar Bear III HD 5D Thermal Path:

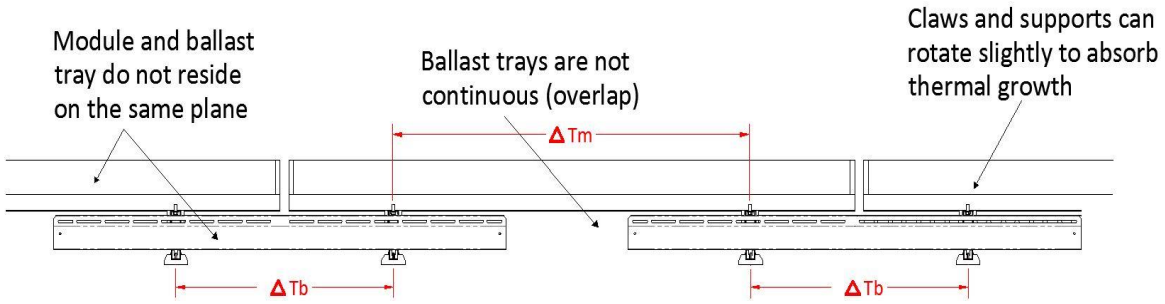

© 2017

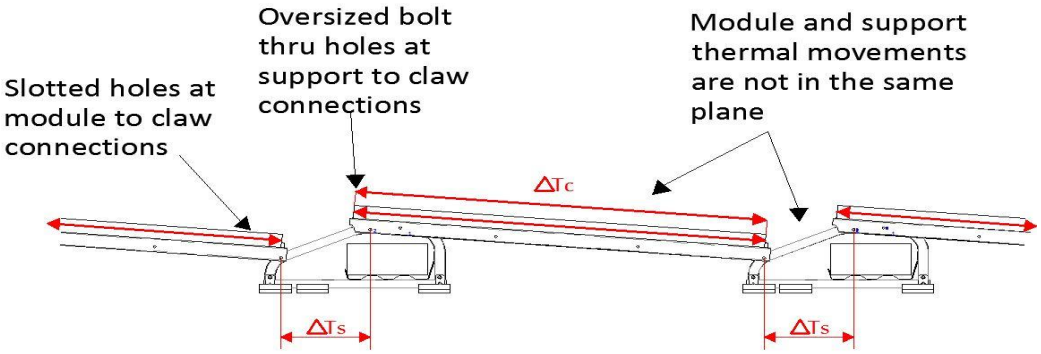

Polar Bear III HD 10D Thermal Path:

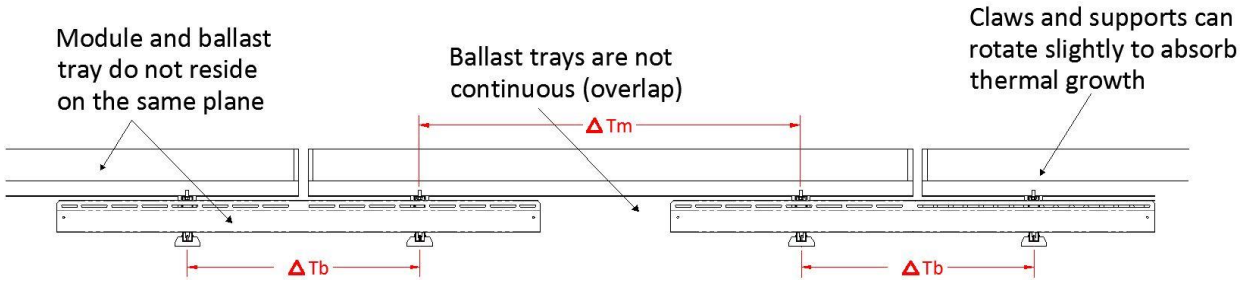

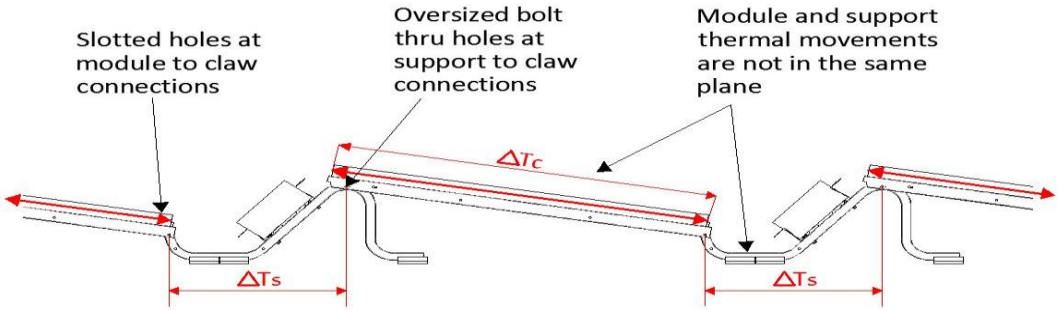

Conclusions:

Estimated N/S thermal displacement = 0.25 inches per 100 feet of array per 100 degrees
Estimated E/W thermal displacement = negligible

About PanelClaw:

PanelClaw is a global expert focusing exclusively on flat roof PV structures. The company is headquartered north of Boston, Massachusetts and has gigawatts of experience designing and engineering flat roof structures in over 30 countries around the world. For more information, contact sales@panelclaw.com

© 2017